Dimension Drawing - Multi RS Solar	
PMR482602020	Multi RS Solar 48/6000/100-450/100

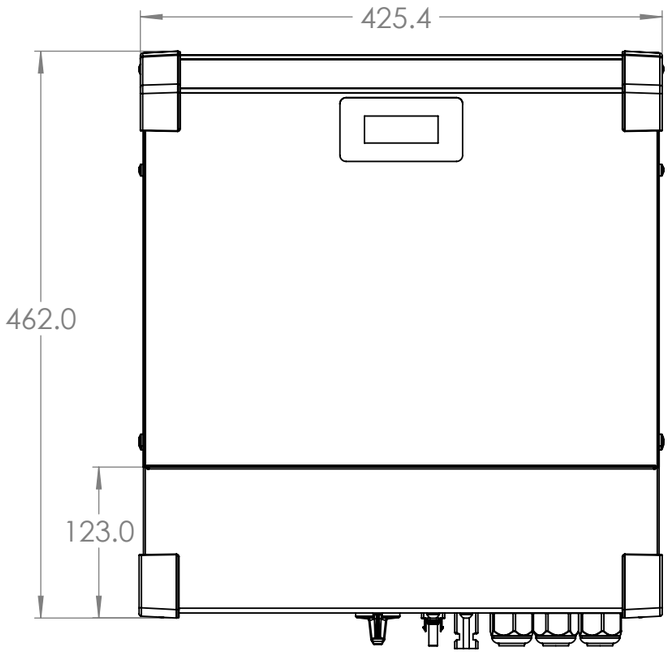

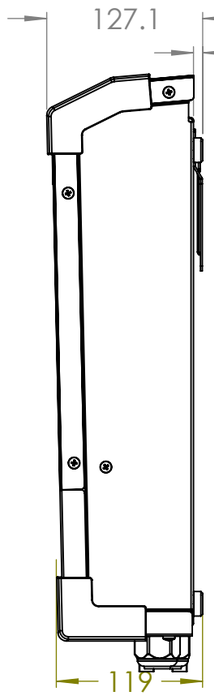

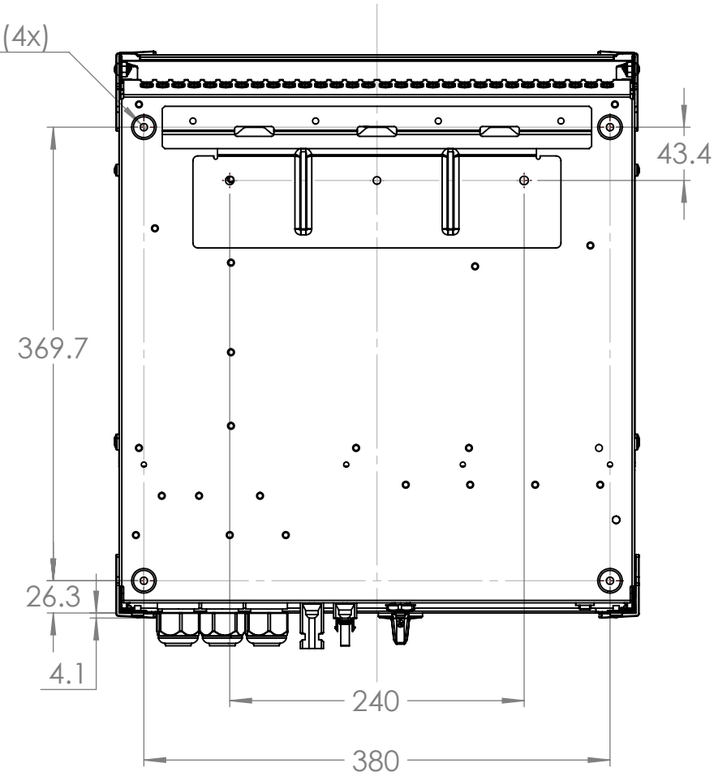

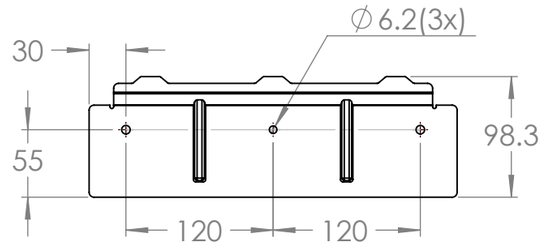

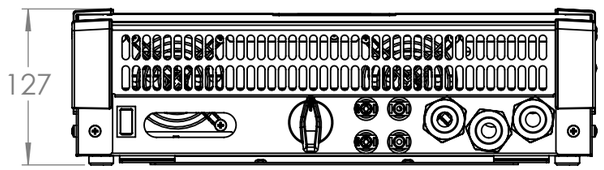

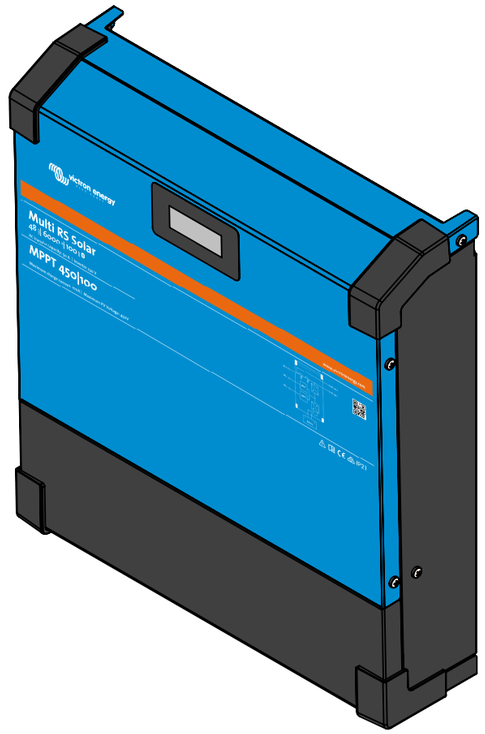

Dimensions in mm

victron energy
BLUE POWER

Rev00